BT02A

①

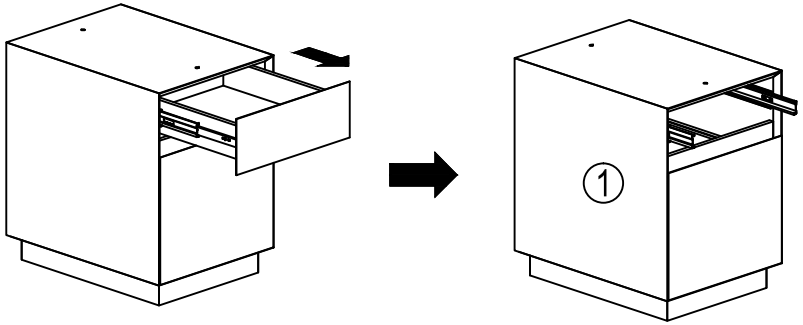

②

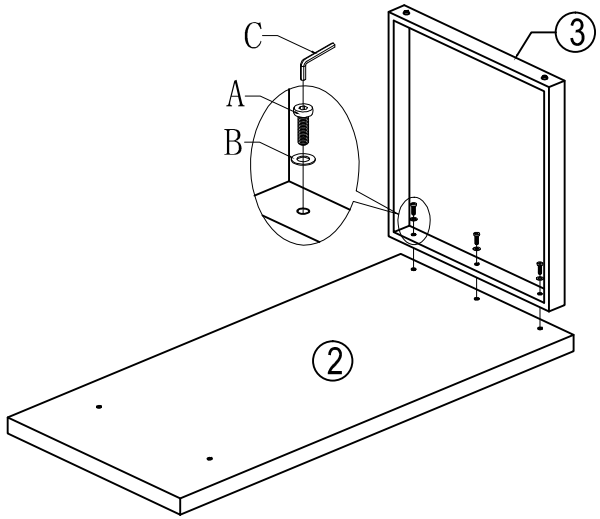

A=3
B=3
C=1

③

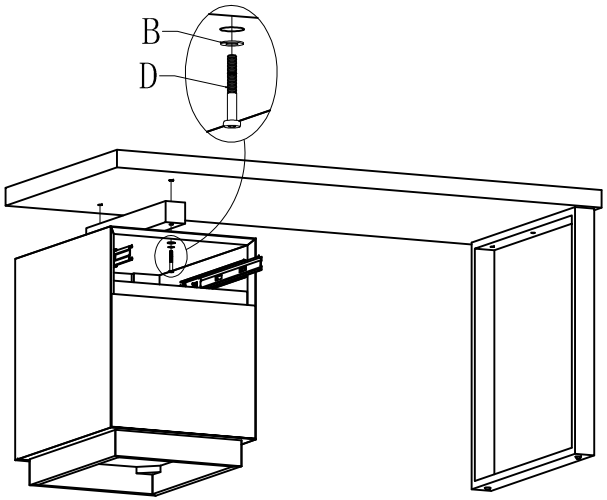

B=2
D=2

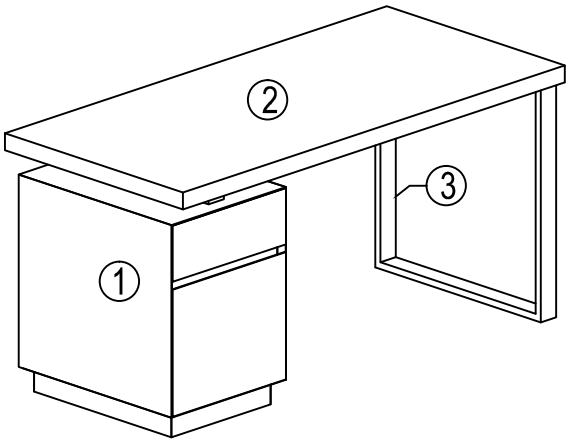

CODE	PICTURE	QTY
A	M8*35mm	3
B	ϕ19mm	5
C	M5*65mm	1
D	M8*90mm	2